BELMONT WHITE 60 MIRROR AND 65 VANITY UNIT

APPROVED DOMESTIC

PRODUCT INFORMATION

ELTLM60	Belmont white 600mm mirror with halogen light and pull cord
ELTBEL65	Belmont white 655mm vanity unit, 1 tap hole, 2 soft closing doors, 1 internal shelf

RELATED PRODUCTS

For a full range of Belmont products please refer to **www.sonasbathrooms.com**

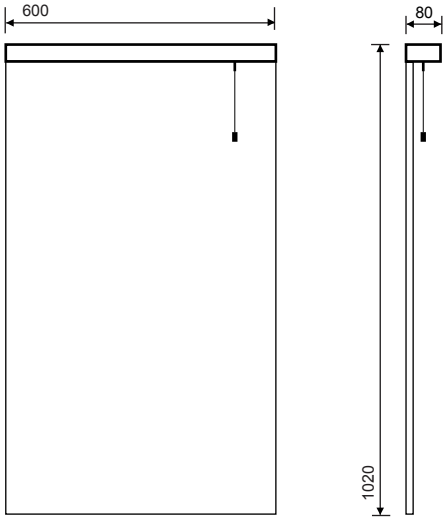

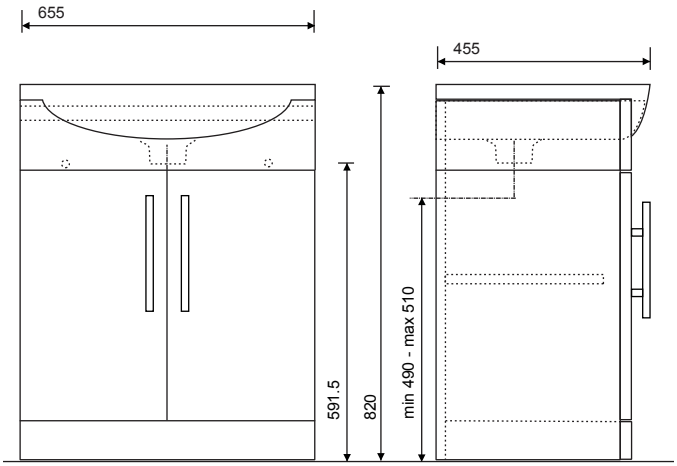

MATERIAL

Carcass: lacquered 16mm melamine board.
Door fronts: lacquered 16mm melamine board.
Durable water resistant finish, *always ensure bathroom has sufficient ventilation and remove any excess water after use.*

COLOUR/FINISH

White

MANUFACTURER

Sonas Bathrooms

FIXING

Fixing kit supplied

APPROVALS

CE approved, IP44, RoHS

PRODUCT DIMENSIONS

Mirror W600 x H1020mm,
Vanity unit W655 x H820 x D455mm

ADDITIONAL INFORMATION

For a full range of taps please refer to **www.sonasbathrooms.com**

All measurements shown are in millimetres.
Drawing sizes are not to scale.